REICHENBACH ENGINEERING CO., INC.

SPECIALISTS IN QUALITY AUDIO TRANSFORMERS

6887 Farmdale Ave., Bldg. 10 • North Hollywood, Ca. 91605 • Telephone: (213) 765-6040

BOBBIN 1/4" 8 PIN PC
CORE LE 250 .014 HL Ni (TAPE LAMS)
CASE MR 112-0875
TERMINAL PC
EMBEDMENT E-CAST E-82 HARDENER 117
1:125
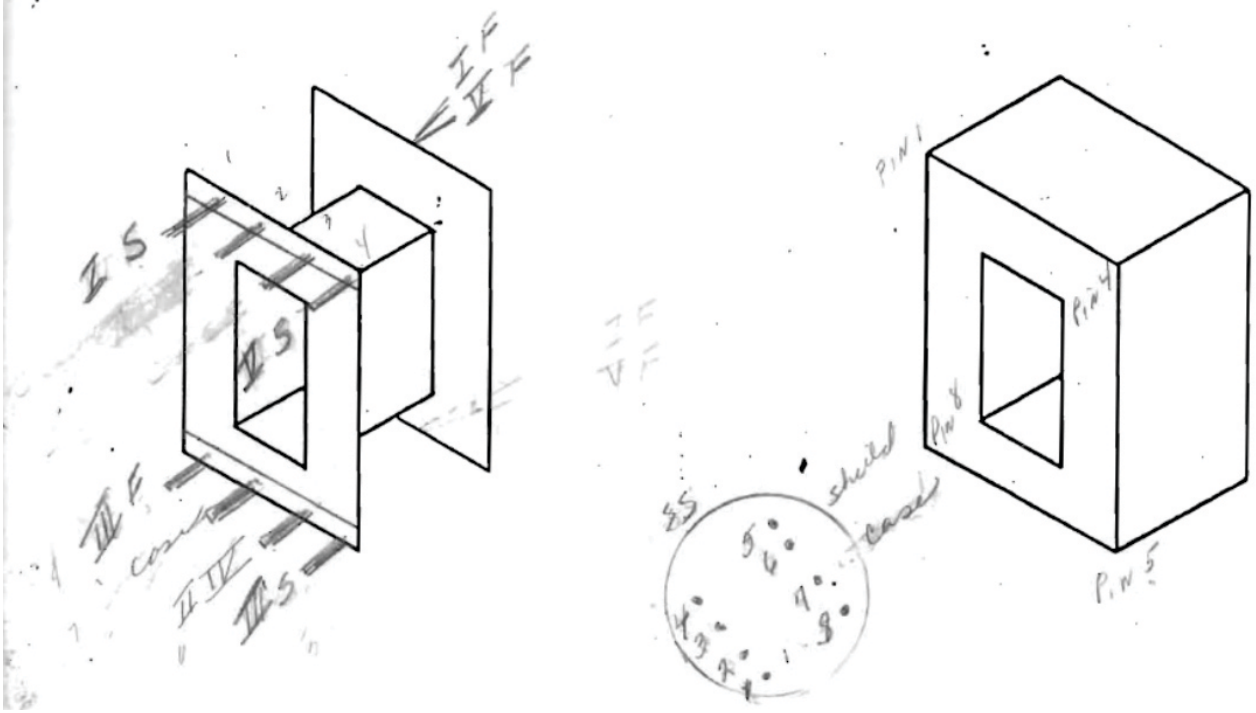
NO. RE-11P-1 PCA
DATE FEB-3-93
CUSTOMER NO. REF 81204
SERVICE