9050 Independence Ave.
Canoga Park, California 91304
☎ (818) 993-4644 ✉ (818) 993-4604

Bobbin:	2-04435	**Part №:**	CM-9887
Core:	124 DU 8414	**Date:**	February 29, 2012
Case:	ZMC 112-0875	**Customer:**	
Terminals:	9" Leads-26ga PRI / 30ga SEC	**Service:**	Ribbon Mic Output
Embedment:	URC F-82		1 : 35 RCA 44

NOTE: ***PRIMARY LEAD WIRE SPECIFICATIONS***

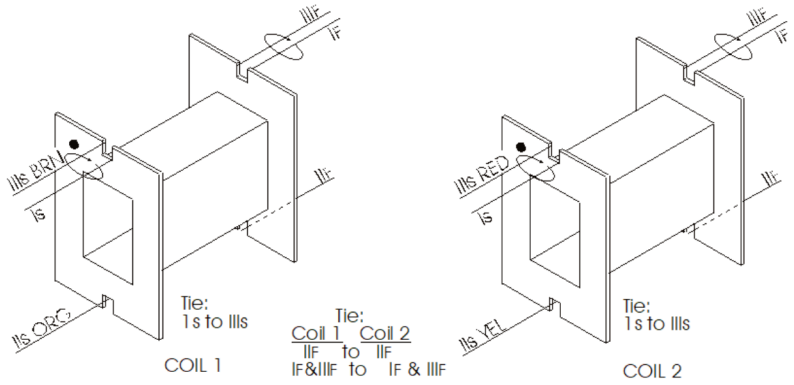

	Use	Notes	Wire	Turns	Tap	Insulation		Use	Notes	Wire	Turns	Tap	Insulation