9050 Independence Ave.
Canoga Park, California 91304
☎ (818) 993-4644 ✉ (818) 993-4604

Bobbin:	2-04435	**Part №:**	CM-22101
Core:	124 DU 8414	**Date:**	June 15, 2005
Case:	ZMC 112-0875	**Customer:**	Audio Engineering Assoc.
Terminals:	PC 8Pin Header or 6" Leads 30ga	**Service:**	Ribbon Microphone 1:32
Embedment:	URC F-82		CM-22101A : Rev A: 1:30 Sec = 210

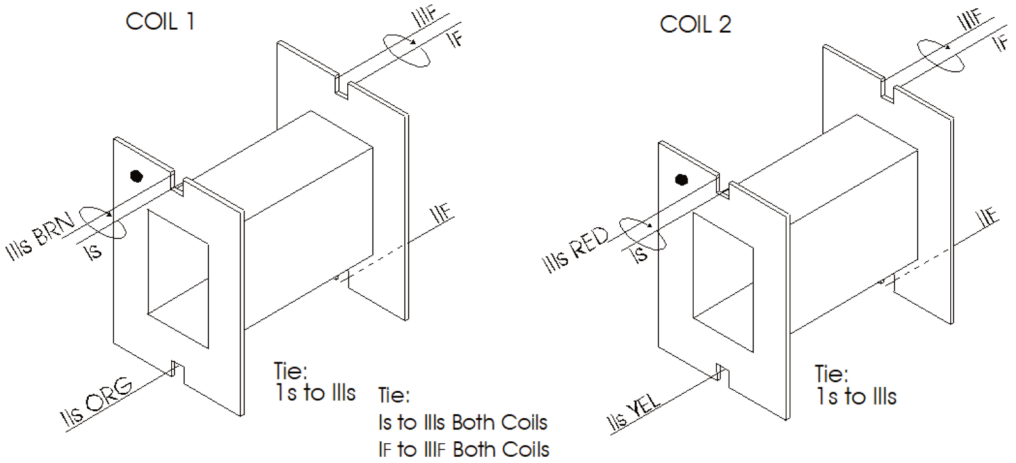

	Use	Notes	Wire	Turns	Tap	Insulation		Use	Notes	Wire	Turns	Tap	Insulation