9050 Independence Ave.
Canoga Park, California 91304
☎ (818) 993-4644 ✉ (818) 993-4604

Bobbin:	2-04435	**Part №:**	CM-1181
Core:	124 DU 8414	**Date:**	November 21, 2011
Case:	ZMC112-0875MU	**Customer:**	Undertone Audio
Terminals:	9" Leads 30ga	**Service:**	Microphone Input
Embedment:			1:1:1:1 Multifilar

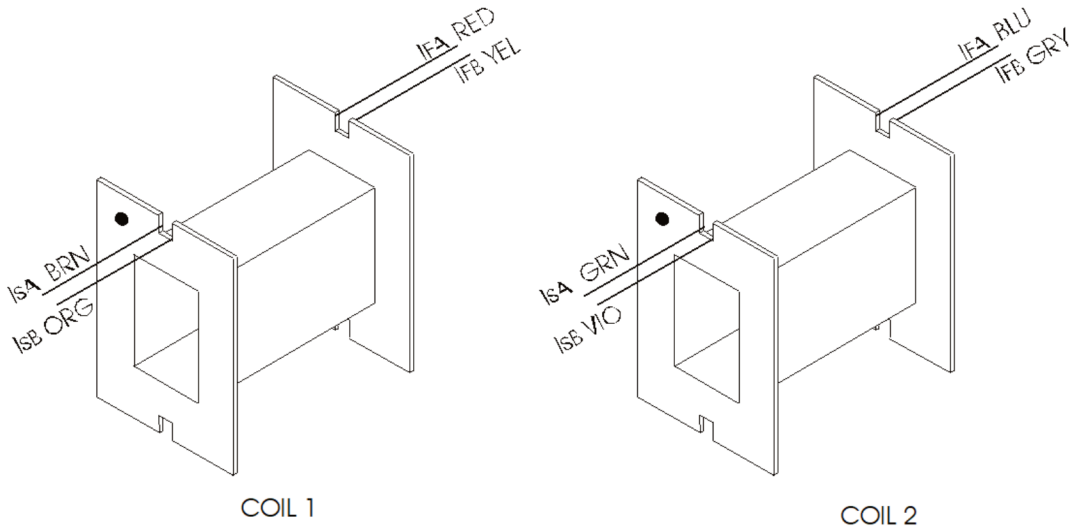

	Use	Notes	Wire	Turns	Tap	Insulation		Use	Notes	Wire	Turns	Tap	Insulation