9050 Independence Ave.
Canoga Park, California 91304
☎ (818) 993-4644 ✉ (818) 993-4604

Bobbin:	Cosmo 2-05834	**Part №:**	CM-10122
Core:	UI31 8014	**Date:**	May 27, 2011
Case:	Open	**Customer:**	JCF Josh Florian
Terminals:	22ga 18"	**Service:**	
Embedment:			

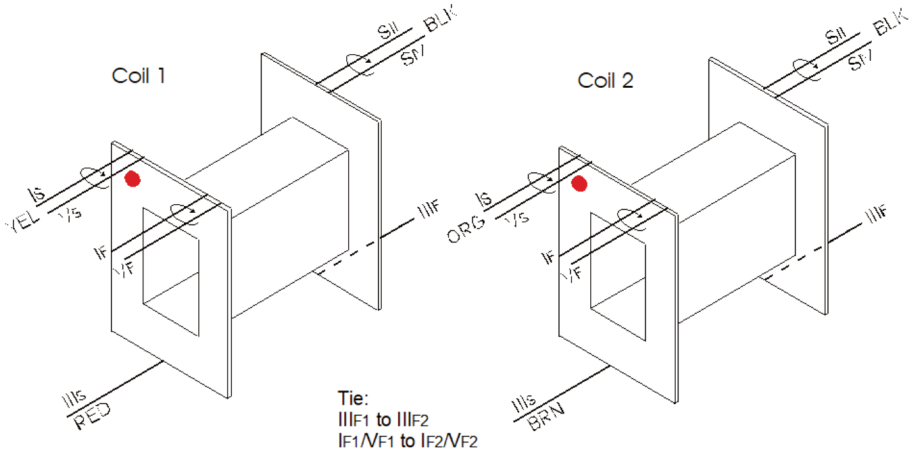

	Use	Notes	Wire	Turns	Tap	Insulation		Use	Notes	Wire	Turns	Tap	Insulation