REICHENBACH ENGINEERING CO., INC.

SPECIALISTS IN QUALITY AUDIO TRANSFORMERS

6887 Farmdale Ave., Bldg. 10 • North Hollywood, Ca. 91605 • Telephone: (213) 765-6040

BOBBIN NY-6
CORE LE 25 .014 ALNI
CASE HE-20
TERMINAL LEADS 7" 30GA
EMBEDMENT

NO. 78105
DATE OCT 2 5 1978
CUSTOMER NO. Universal Studios
SERVICE 150Ω To 150Ω
FOR PHANTOM POWER

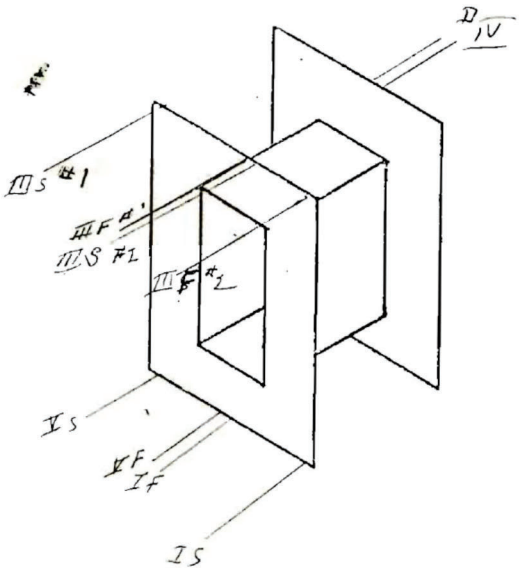

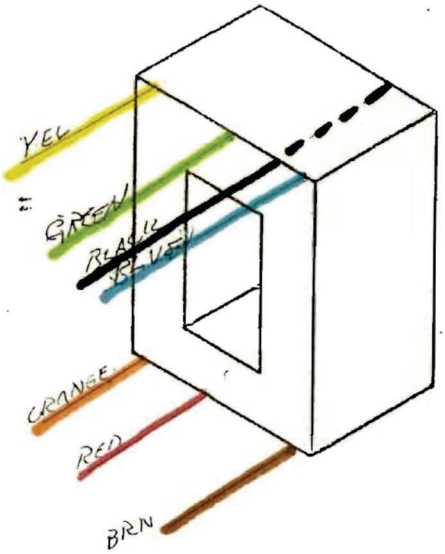

	USE	DCR	WIRE	TURNS	TAP	INSULATION
1	PRI		37SS	300		4L .007 K