TRANSFORMER DIVISION

INTERNATIONAL ELECTRONIC RESEARCH CORPORATION

BIN 4-4598

CORE EI 21 29GA M6

CASE

TERMINAL

EMBEDMENT

NO. 7593

DATE SEP 18 1975

CUSTOMER NO. SPHERE

SERVICE 600 TO 600 Ω 1/2 SHIELDE
-20 DBM WINDINGS

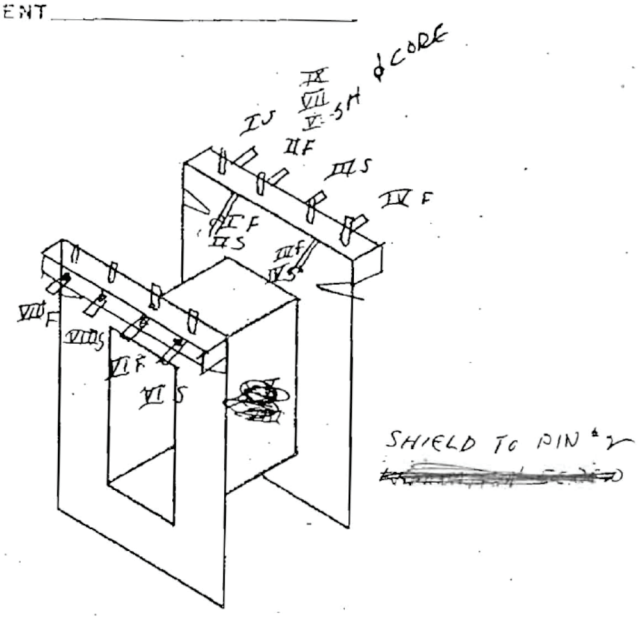

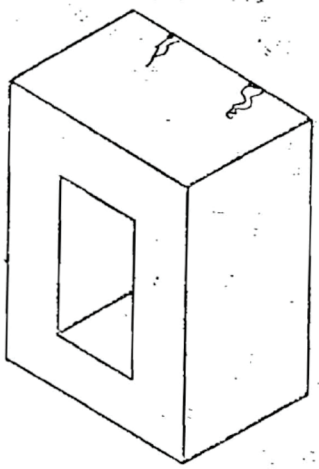

	USE	DCR	WIRE	TURNS	TAP	INSULATION
I	PRI		32 SS	531		
II	PRI		32 SS	531		
III	SEC		32 SS	531		
IV	SEC		32 SS	531		1 L .005 PA